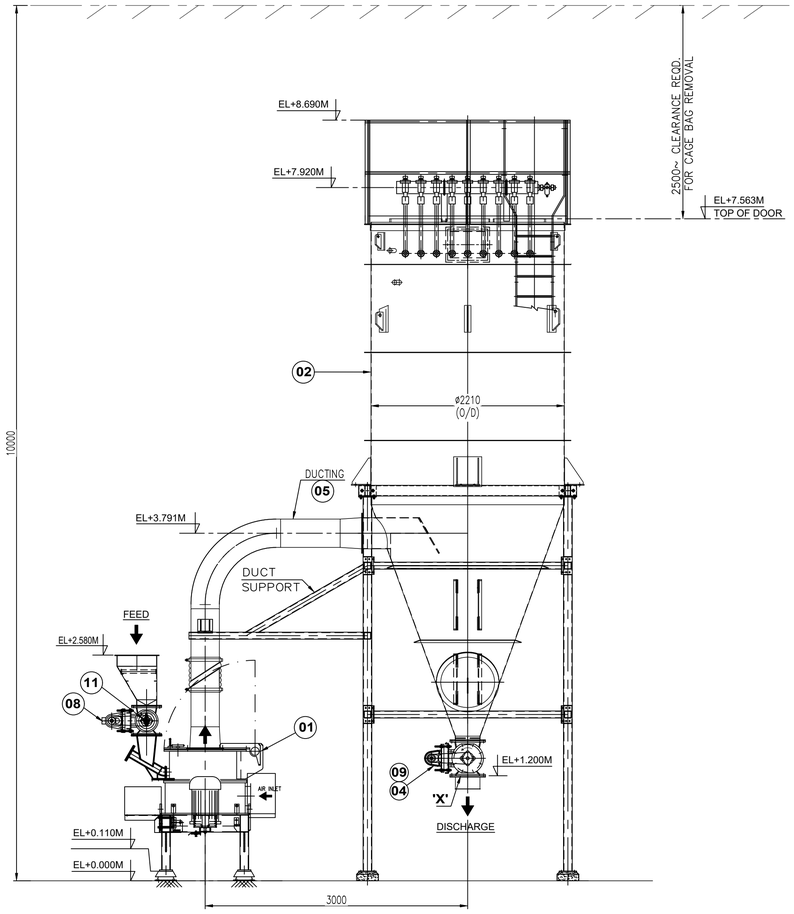

SECTION B-B

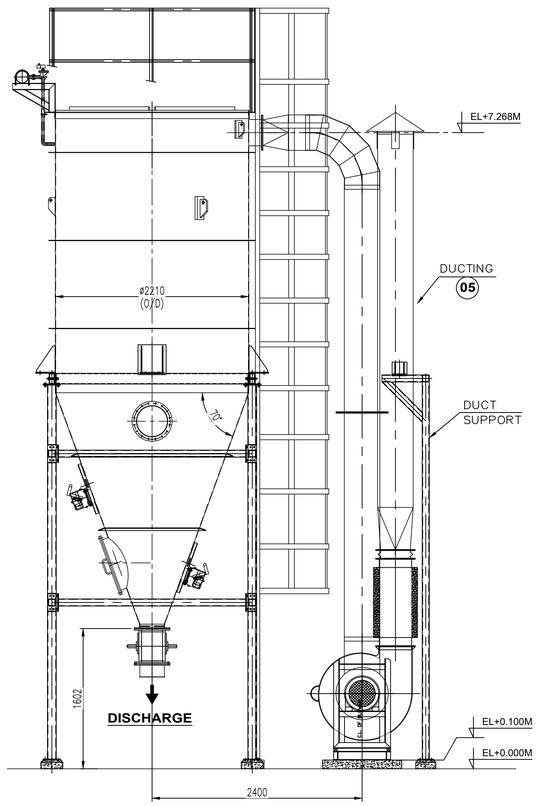

SECTION A-A

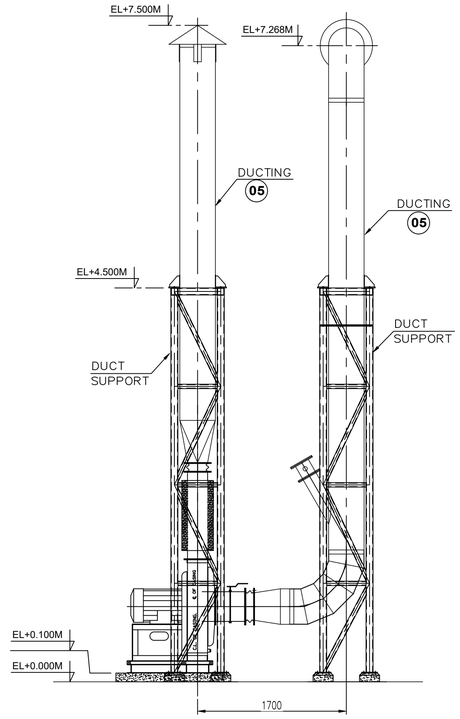

VIEW FROM C-C

DESIGN DATA

MATERIAL	:-	CHANA DAL (gram flour)
FEED SIZE	:-	SPILT DAL
CAPACITY	:-	1000-1200 kg/hr
BULK DENSITY	:-	800-900 kg/m^3
FINAL PRODUCT SIZE	:-	95% (-) 100 to120 mesh BSS

LOAD DATA

EQUIPMENT	LOAD kg STATIC	LOAD kg DYNAMIC
60 ACM	2500	6250
BAG FILTER+RAL	3000	3225
FAN	900	1400

OPTION-2

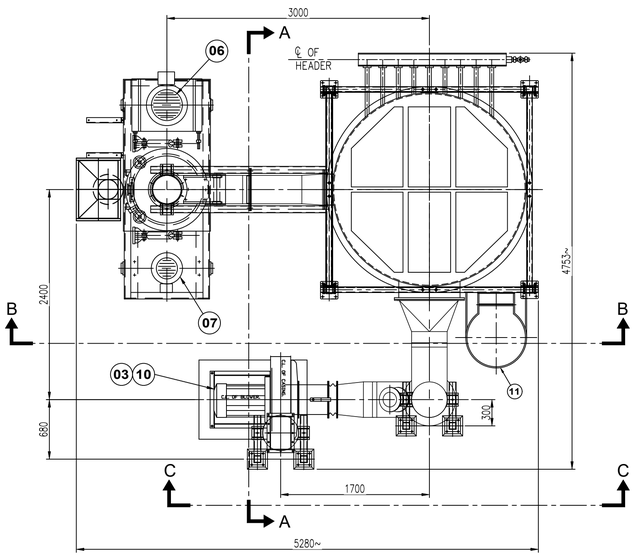

PLAN

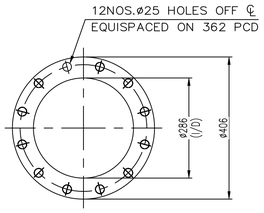

DETAIL-X
RAL DISCHARGE FLANGE
AL-250

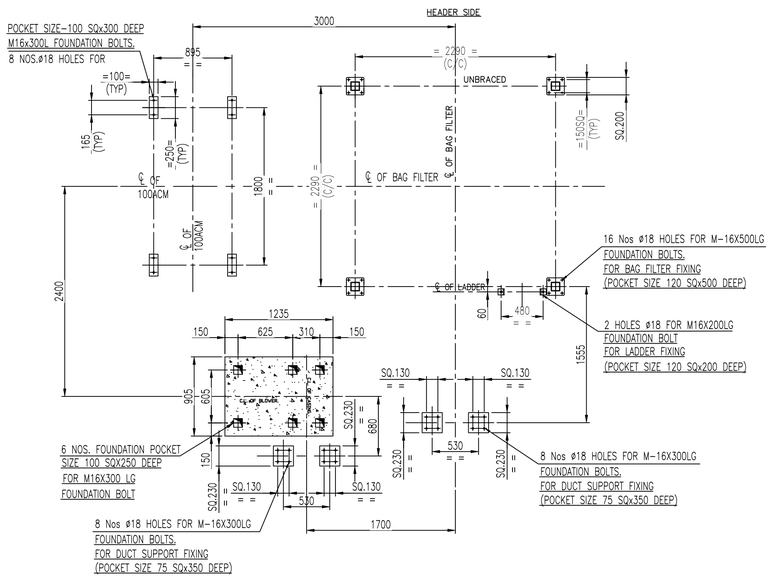

FOUNDATION PLAN @ 100MM LVL

NOTES:-

1. ALL DIMENSIONS ARE IN MM UNLESS NOTED.
2. DO NOT SCALE THE DRAWING.
3. IF IN DOUBT ASK.
4. ALL MOTORS ARE SUITABLE FOR 3ø 415V ±10%,50Hz ±5%,AC SUPPLY, WITH IP-55 ENCLOSURE,F-CLASS INSULATION,45° AMBIENT
5. COMPRESSED AIR REQUIRED 5 HP CLEAN DRY & OIL FREE COMPRESSED TO 7 TO 2 kg/cm^2 g TO BE ARRANGED BY CLIENT
6. GASKET – WHITE NEOPRENE RUBBER FOOD GRADE
7. DUCTING SUPPORTS TO BE GIVEN BY CLIENT AT SITE IF REQUIRED.
8. CONTROL PANEL CAN BE KEPT ANY WHERE AS PER SPACE AVAILABLE BUT NEAR MILL.
9. PAINT SPEC : SYNTHETIC ENAMEL PAINTING.(WHITE)

SR.No	PART No.	QTY	DESCRIPTION	MOC	SIZE	REMARK
12		1	CONTROL PANEL	STD	–	NOT SHOWN
11		1	RAL (FEED)	CI/MS	AL-200	
10		1	MOTOR FOR FAN(B-3 MOUNTING)	STD	50 HP	
9		1	GEARED MOTOR FOR RAL(B-6 MOUNTING)	STD	1 HP	
8		1	GEARED MOTOR FOR RAL(B-6 MOUNTING)	STD	0.5 HP	
7		1	CLASSIFIER MOTOR (V-1 MOUNTING)	MS	15 HP	
6		1	MAIN MOTOR (V1 MOUNTING)	STD	60 HP	
5		1	DUCTING	MS	–	
4		1	RAL BELOW BAG FILTER	CI/MS	AL-250	
3		1	FAN	MS	–	
2		1	BAG FILTER TRL	MS	78-8 CYL TRL	
1		1	MILL	CI/MS	60 ACM	

CLIENT	-
CONSULTANT	-
RIECO'S S.O.No.	-
CLIENT'S P.O.No.	-

UNSPECIFIED DEVIATIONS LINEAR DIMENSION BASIC SIZE RANGE	MACHINING	FABRICATION
0.5-3	± 0.05	± 0.2
3-6	± 0.05	± 0.3
6-30	± 0.1	± 0.5
30-120	± 0.15	± 0.8
120-400	± 0.2	± 1.2
400-1000	± 0.3	± 2
1000-2000	± 0.5	± 3
2000-4000	—	± 4

ROUGHNESS GRADE NO.	N12	N11	N10	N9	N8	N7	N6	N5	N4	N3	N2	N1
ROUGHNESS VALUE:Ra µ m	100	50	25	12.5	6.3	3.2	1.6	0.8	0.4	0.2	0.1	0.05

ROUGHNESS SYMBOL

ALL DIMENSION ARE IN MM.
DEBUR CORNERS 0.3x45°
UNSPECIFIED CHAMFERS 0.5x45°
DO NOT SCALE IF IN DOUBT. ASK.

PROPRIETARY AND CONFIDENTIAL THE INFORMATION CONTAINED IN THIS DRAWING IS THE SOLE PROPERTY OF **RIECO INDUSTRIES LTD.** ANY REPRODUCTION IN PART OR AS A WHOLE WITHOUT PERMISSION OF THE WRITTEN **RIECO INDUSTRIES LTD.** PROHIBITED.

REV	ZONE	DATE	DESCRIPTION	DRAWN	CHECK

RIECO INDUSTRIES LTD.
1162/2 SHIVAJINAGAR,BEHIND OBSERVATORY,PUNE-411 005 (INDIA)

	SIGN	DATE D	M	Y
DRAWN	SRK	04	11	2025
CHECKED	NSP	04	11	2025
APPROVED	NSP	04	11	2025

TITLE: **60 ACM PLANT LAYOUT**

REFERENCE DRG. No.	SCALE	DRAWING No	REV.	SHEET
REPLACES DRG. No.	1:35	A0xxxxxxxxxxxx	0	1 OF 1